THIS DRAWING IS THE EXCLUSIVE PROPERTY OF MARQUARDT. WITHOUT THEIR CONSENT IT MAY NOT BE REPRODUCED OR GIVEN TO THIRD PARTIES.

CONFIDENTIAL

VERTRAULICH

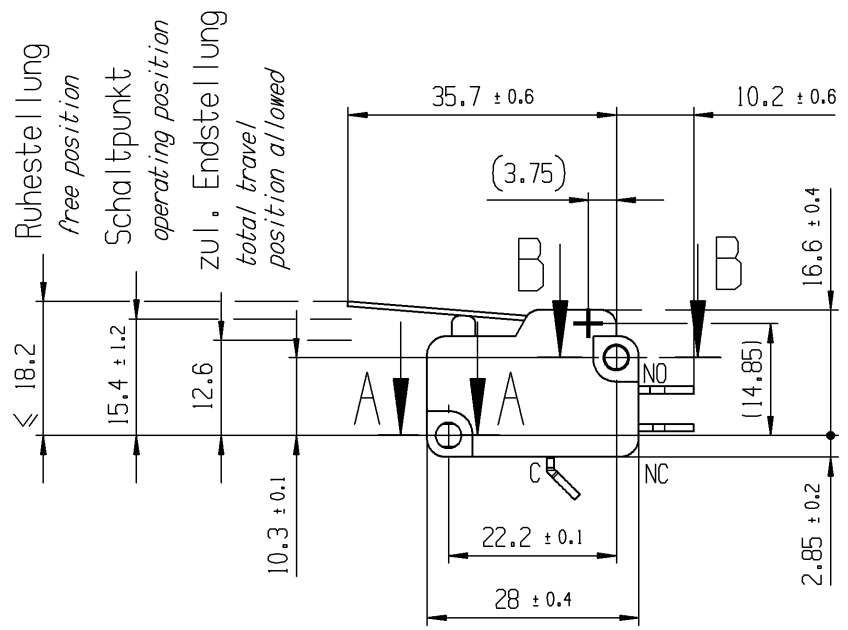

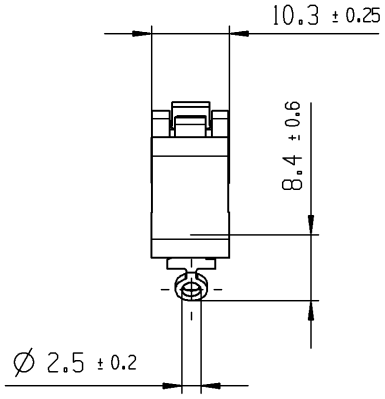

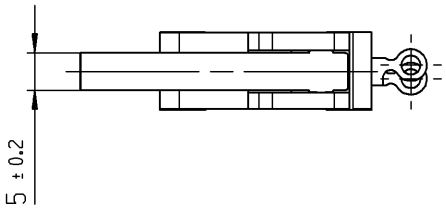

A-A
2:1

B-B
2:1

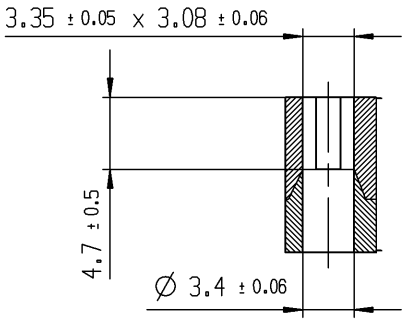

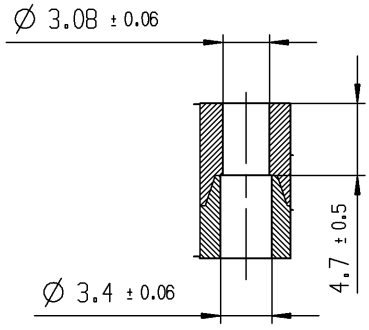

Aufschrift
marking

1006µ
10(4)A 400V AC 1E4
6(2.5)A 400V AC 5E4 T100

15 c UL us LISTED [E41701]

Herstellort / -jahr / -woche
Code of manufacture: place / year / week

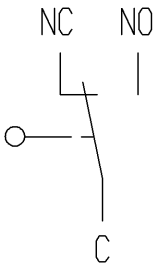

Wechsler 1-polig
single pole changeover

Schalt-Betaetigungskraft 0.8 bis 1.4 N
actuating force *0.8 up to 1.4 N*

Differenzweg ≤ 0.7 mm
movement differential

Figure	Type	Customer Part No.	Art.No.-PI
-	-	-	1006.0901-XX

Shape and location	Angle ± 2 °	Length			Radii	
	Edge tolerance	0-6	± 0.1	±	0-6	± 0.2
		>6-15	± 0.15	±	>6-15	± 0.3
		>15-30	± 0.2	±	>15-30	± 0.5
		>30-70	± 0.3	±	>30-200	± 10%
		>70-120	± 0.4	±		±
		>120-200	± 0.8	±		±
			±	±		±
			±	±		±

Sheet	Format DIN	Projection	Scale
01	A4		1:1

All dimensions are in millimetres

Ident.	Document number	Index
K	10060901	h

Snap action switch

Index	MEC-No.	Date (YYYY-MM-DD)	Edited by
h	137878	2022-01-27	KELBOUSSIM
g	134431	2020-10-21	HHE
f	128297	2020-01-27	HHE
e	85449	2013-10-15	BRC

System NX V1872

Replacement of Zg.gl.Nr.v.02.09.1999

MARQUARDT

Alle Rechte bei Marquardt, auch fuer den Fall von Schutzrechtsanmeldungen. Jede Verfuegungsbefugnis, wie Kopier- und Weitergaberecht, bei uns.