THIS DRAWING IS THE EXCLUSIVE PROPERTY OF MARQUARDT. WITHOUT THEIR CONSENT IT MAY NOT BE REPRODUCED OR GIVEN TO THIRD PARTIES.
CONFIDENTIAL
VERTRAULICH

1	2	3	4
recommended cut-out for snap-in fixing (edge opposite to snap-in direction)	wall thickness	length of cut-out	width of cut-out
	0.75 to 1.25	19.2 -0.1	21.9+0.1
	1.25 to 2	19.4 -0.1	21.9+0.1
	2 to 3	19.8 -0.1	21.9+0.1

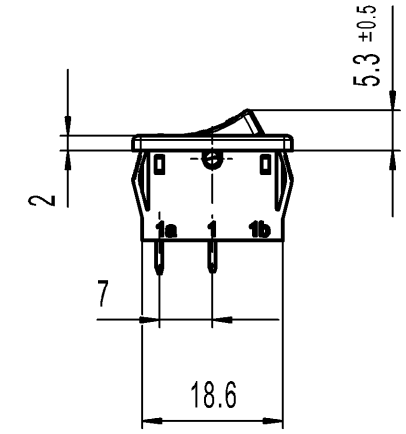

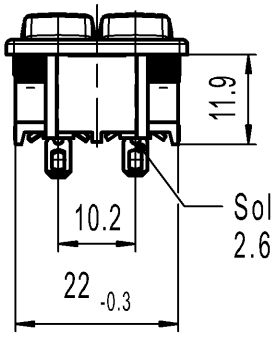

Solder terminal
2.6 x 1.6

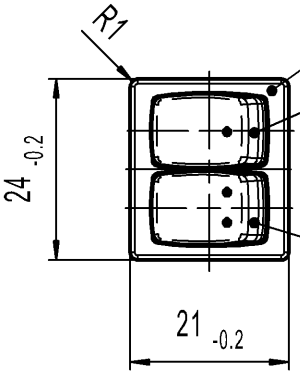

black

rocker orange
symbol black

rocker red
symbol black

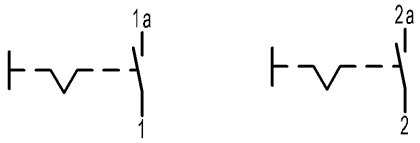

2 times SPST
Suitable for appliances of class II

Marking

1806.
6(4)/250~5E4
10(4)/250~ T100/55

6A 125-250V AC
1/4 HP 125V AC
1/2 HP 250V AC
R30

Code of manufacture: place/year/week

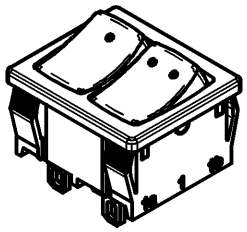

Figure	Type	Customer Part No.	Art.No.-PI
-	-	-	1806.6108-XX

Shape and location	Angle ± 2 °	Length				Radii	
	Edge tolerance	0-6	± 0.2		±		± 0.2
		>6-15	± 0.4		±		±
		>15-30	± 0.4		±		±
			±		±		±
			±		±		±
			±		±		±
			±		±		±
			±		±		±

Index	MEC-No.	Date (YYYY-MM-DD)	Edited by
d	137893	2021-06-07	JOSHIO
c	64492	2009-09-02	MUT
b	29285	2000-05-09	MUT
a	26125	1998-10-28	SIG

Sheet 01

Format DIN A4 | Projection | Scale 1:1

All dimensions are in millimetres

System NX V1872

Replacement of Zg.gl.Nr.v.23.03.1998

Ident.	Document number	Index
K	18066108	d

Appliance Switch

MARQUARDT

Alle Rechte bei Marquardt, auch fuer den Fall von Schutzrechtsanmeldungen. Jede Verfuegungsbefugnis, wie Kopier- und Weitergaberecht, bei uns.