THIS DRAWING IS THE EXCLUSIVE PROPERTY OF MARQUARDT. WITHOUT THEIR CONSENT IT MAY NOT BE REPRODUCED OR GIVEN TO THIRD PARTIES.

CONFIDENTIAL

VERTRAULICH

Alle Rechte bei Marquardt, auch fuer den Fall von Schutzrechtsanmeldungen. Jede Verfuegungsbefugnis, wie Kopier- und Weitergaberecht, bei uns.

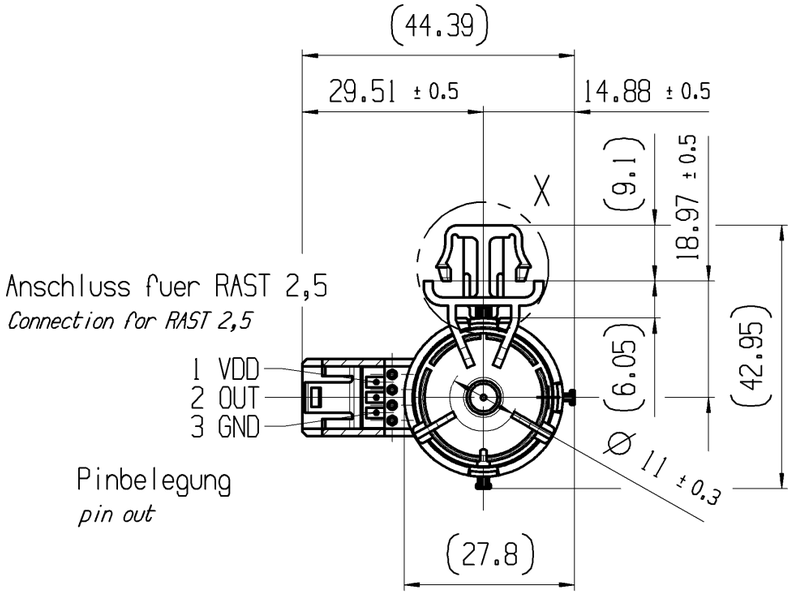

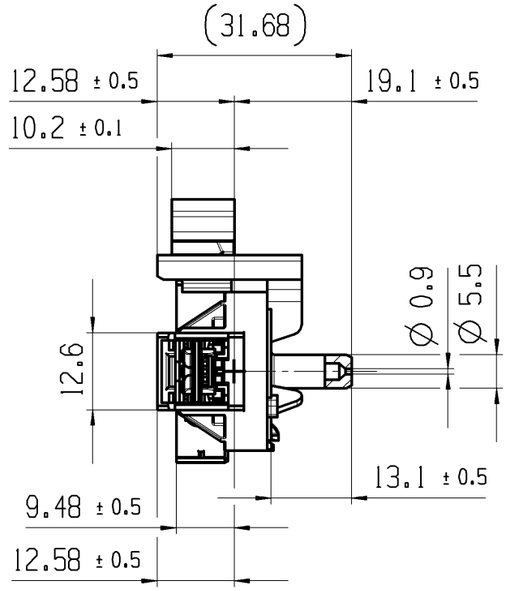

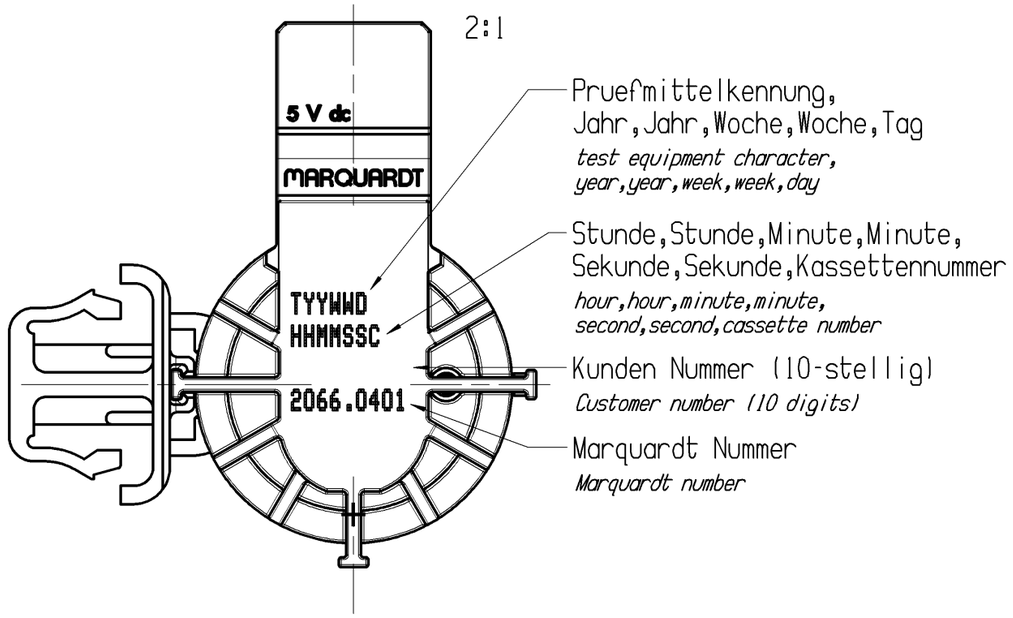

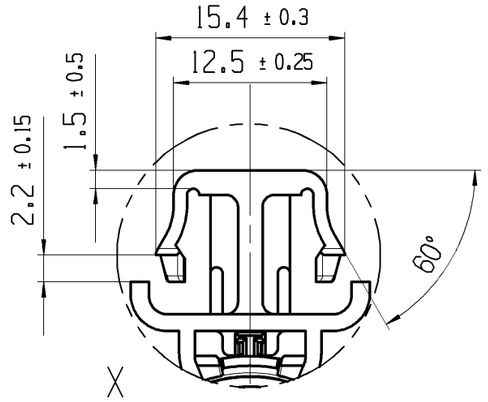

X
2:1

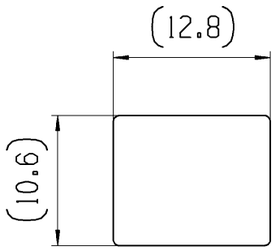

Blechhaltekontur 2:1
Panel mounting hole

Blechdicke:
1mm - 1.6mm
frei von Grat

Sheet metal thickness:
1mm - 1.6mm
free of burr

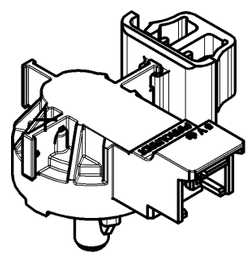

POKA YOKE ELEMENT
Sensor n.i.O. geprueft
Sensor EOL failed

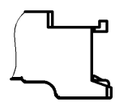

Sensor i.O. geprueft
Sensor EOL passed

POKA-YOKE ELEMENT im i.O. geprueften Zustand nicht vorhanden
POKA-YOKE ELEMENT in EOL passed not existent

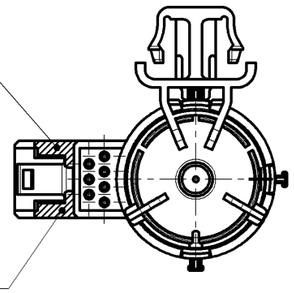

* Left or Right Side for thermo ink marking

Figure	Type	Customer No.	Art.No.-PI
-	-	-	2066.0401-XX

Shape and location ◎ ≡ 0.1

Angle ± 2 °

Edge tolerance +0.25 0 +0.1 -0.25

Length				Radii	
0-6	± 0.1		±	0-6	± 0.2
>6-15	± 0.15		±	>6-15	± 0.3
>15-30	± 0.2		±	>15-30	± 0.5
>30-70	± 0.3		±	>30-200	± 10%
>70-120	± 0.4		±		±
>120-200	± 0.8		±		±
	±		±		±
	±		±		±

Index	MEC-No.	Date (YYYY-MM-DD)	Edited by
g	149276	2024-02-02	NOOMENES
f	146805	2023-06-23	HAFIM
e	109103	2017-05-23	DRI
d	86965	2014-02-04	NAM

Sheet 01

Format DIN A3 | Projection | Scale 1:1

All dimensions are in millimetres

System NX V1899

Replacement of

Ident.	Document number	Index
K	20660401	g

Pressure sensor

MARQUARDT