THIS DRAWING IS THE EXCLUSIVE PROPERTY OF MARQUARDT. WITHOUT THEIR CONSENT IT MAY NOT BE REPRODUCED OR GIVEN TO THIRD PARTIES.

VERTRAULICH CONFIDENTIAL

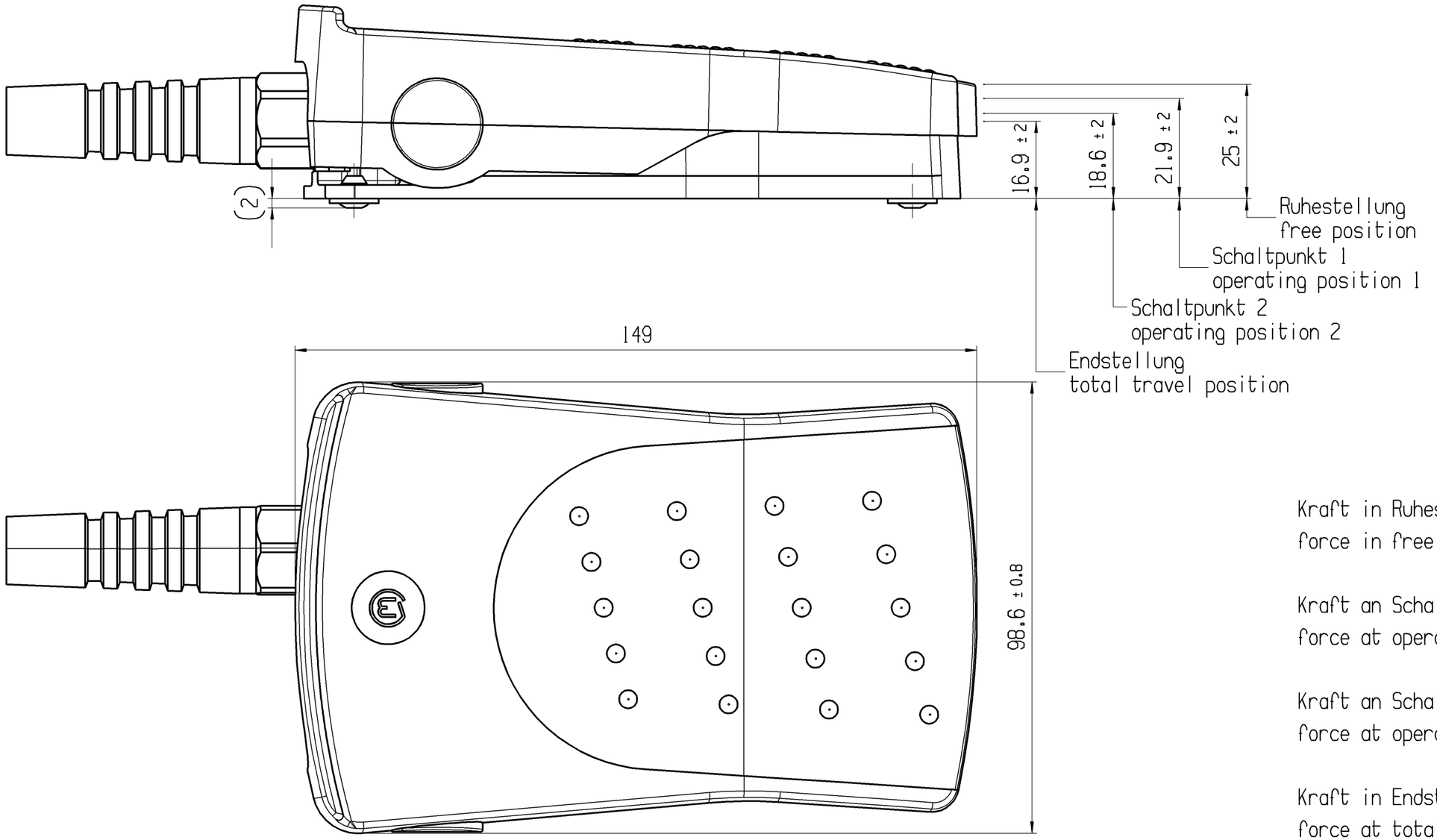

Aufschrift:
Marking:

Ⓜ 2420.0501

14(4) / 250 ~ μ 50E3

Herstelldatum:
Herstellort/ -jahr/ -woche/ -tag
nach Marquardt Standard

Date code of manufacture:
plant / year / week / day
acc. to Marquardt standard

Kraft in Ruhestellung force in free position	24 N ± 10 N
Kraft an Schaltpunkt 1 force at operating position 1	29 N ± 10 N
Kraft an Schaltpunkt 2 force at operating position 2	51 N ± 35 N
Kraft in Endstellung force at total travel position	89 N ± 35 N

Beigelegte Bedienungsanleitung beachten
Please observe user manual for further information

1:2

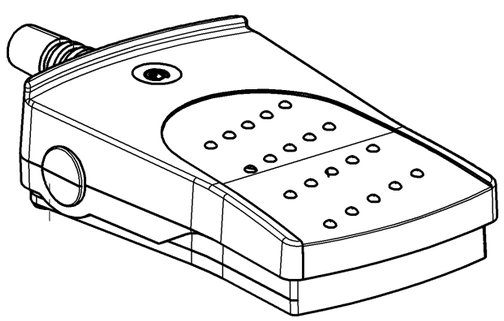

Schaltbild
circuit diagramm

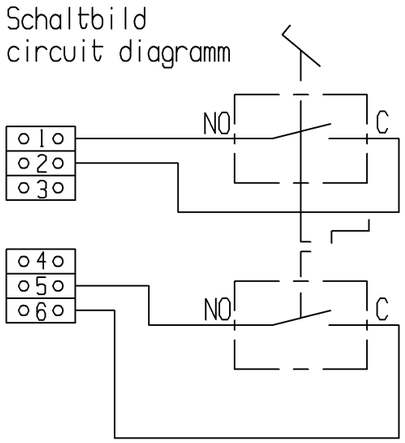

Figure	Type	Customer No.	Art.No.-PI
-	-	-	2420.0501-XX

Shape and location	Angle ± 2 °	Length			Radii	
	Edge tolerance	0-6	± 0.15	±	0-6	± 0.2
		>6-15	± 0.2	±	>6-15	± 0.3
		>15-30	± 0.25	±	>15-30	± 0.5
		>30-70	± 0.4	±	>30-200	± 10%
		>70-120	± 0.6	±		±
		>120-200	± 0.8	±		±
			±	±		±
			±	±		±

Sheet	01		
Format DIN	Projection	Scale	
A3		1:1	

All dimensions are in millimetres

System NX V2007

Replacement of V09111330

Ident.	Document number	Index
K	24200501	e

foot switch

MARQUARDT

Index	MEC-No.	Date (YYYY-MM-DD)	Edited by
e	155053	2024-12-12	ECHINEM
d	123519	2019-06-12	TRIGUIK
c	74959	2011-08-25	FRT
b	73342	2011-04-19	HHE

Alle Rechte bei Marquardt, auch fuer den Fall von Schutzrechtsanmeldungen. Jede Verfuegungsbefugnis, wie Kopier- und Weitergaberecht, bei uns.